Hose Management + Vacuum

8545-WHT-ALL

Hose Management Only

8545-WHT-IN

INSTALLATION & OPERATION MANUAL

PN: MOD-10102

Rev: 3.0

Whether you purchased the Doc IT ALL – Hose management product with built in Vacuum or the Doc IT IN – Central Hose Management System, the makers of the product wish to thank you.

For household use only

This document will assist with installation, operation, maintenance and any questions that may arise. The manual is divided into two sections for INSTALLATION and one section for OPERATION. Since the hose management function is the same for both series of models, this will only be described once. Please refer to the "ALL" OR IN instructions when prompted to do so.

This product was inspected and packaged carefully before being shipped from the factory. Should you need assistance during installation or operation, call an authorized service outlet.

NOTE: The terms "Floor Brush" and "Power Head" mean the same thing and are used interchangabely through out this document.

Also, units referenced as "AIR" or "AIR ONLY" refer to systems not supporting the use of an Electric Floor Brush/Power Head.

Fill in and retain

The Doc IT ALL OR Doc IT IN will be permanently mounted. For your records, please enter the Model and Serial numbers in the spaces provided below and retain in a safe place.

MODEL NUMBER:	SERIAL NUMBER:

*****VACUUM SERIAL NUMBER:

Attach your sales receipt to this owner's manual. Verification of purchase date may be required for warranty service.

*****If this is a Doc IT ALL, please record Vacuum Serial Number located inside the front cover of the vacuum unit.

Canavac Systems Inc © 2013

Table of Contents

IMPORTANT SAFEGUARDS 4
GROUNDING 5
SAFETY FEATURES 5
INSTALLATION 7
Location & Preparing the Wall Cavity ("ALL" Series units only) 7
Preparing the Cabinet ("ALL" Series) 10
Preparing the Cabinet (IN) 12
Hardwired Permanent Installation: 13
Completing the Installation ("ALL" Series) 15
Completing the Installation (IN) 16
OPERATION 19
Initial Preparation 19
Hose Handle Controls 20
Bag Replacement 21
CARE AND MAINTENANCE 22
SPECIFICATIONS 22
Electrical 22
Mechanical 22
PARTS LIST 22
TROUBLE SHOOTING GUIDE 23
CONTROLS AND RESET BUTTONS 24
LIMITED LIFETIME WARRANTY ..... **Error! Bookmark not defined.**

Canavac Systems Inc © 2013

IMPORTANT SAFEGUARDS

Warning: To reduce the risk of fire, electric shock, or injury:
READ ALL INSTRUCTIONS BEFORE INSTALLING & USING APPLIANCE.

- Do not attempt to permanently install the wiring of your Doc IT ALL or Doc IT IN System. Consult a qualified electrician to wire your system to a Ground Fault Circuit Interrupter (GFCI) according to local codes and ordinances.
- If not hardwired, connect to grounded outlet. Do not alter or break off ground prong on cord.
- Do not pull hose outdoors, or use on wet surfaces. Do not vacuum up water.
- Do not retract hose until the hose side of the handle hits the retractor; instead, release the button prior to contact. Damage to the retractor mechanism and/hose may occur
- Use only as described in this manual. Use only manufacturer's recommended attachments.
- Do not allow children to use this appliance as a toy. Close attention is necessary when used by or near children.
- Do not close a door on hose, or pull hose around sharp edges or corners. Keep hose away from heated surfaces.
- Do not remove control cover at top of the cabinet beside the handle. No user serviceable parts inside.
- Never handle plug or appliance with wet hands.
- Use extra care when cleaning stairs.
- Do not use to pick up flammable or combustible liquids such as gasoline or fine wood sawdust or use in areas where they may be present. Do not pick up anything that is burning or smoking, such as cigarettes, matches or hot ashes.
- Do not put any objects into openings. Do not use with any openings blocked. Keep free of dust, string, hair and anything that may reduce or obstruct air flow.
- Do not hold or grab hose when it is being retracted into cabinet opening, as there is a risk of catching hair, fingers, loose clothing or other body parts by the retractor mechanism.
- Always turn off this appliance before connecting or disconnecting either hose or power head.
- Unplug or Turn off Main Breaker before servicing Cabinet wiring.
- This hose contains electrical wires. Do not vacuum up sharp objects as they could puncture the hose wall and cause physical injury. Do not use the hose if it is damaged, cut or punctured.
- Ensure this product is plugged into OR wired to a dedicated 15 Amp circuit ("ALL" Series only) and on a circuit without an Arc Fault Circuit Interrupter (AFCI) installed; Unless AFCI is capable of operating with motor loads. (Motor noise from retractor may/will cause some AFCIs to nuisance trip)
- For systems with power cords, do not unplug the electrical connection from the wall by pulling on the cord. To unplug, grasp the plug, not the cord.
- Do not operate the Doc IT ALL® without the dust collection bag and filter cup in place (See Installation Instructions).
- Do not use this unit with vacuum continuously blocked. This will cause the motor to overheat and an automatic thermal protector will shut down the vacuum motor.
- This product is NOT intended for use by small/young Children-IT IS NOT A TOY.

If this appliance is not working as it should, has been dropped, damaged, left outdoors, or dropped into water, take it to an Authorized Doc IT Service Dealer.

Canavac Systems Inc © 2013

Save these instructions!

GROUNDING

This appliance must be grounded. If appliance should malfunction or breakdown, grounding provides a path of least resistance for electric current, reducing the risk of electric shock. This appliance is equipped with a cord having an equipment-grounding conductor and plug. The plug must be inserted into an appropriate outlet that is properly installed and grounded in accordance with all local codes and ordinances.

WARNING – Improper connection of the equipment-grounding conductor can result in a risk of electric shock. Check with a qualified electrician or service person if you are in doubt as to whether an outlet is properly grounded. Do not modify the plug provided with the appliance if it will not fit the outlet. Have a proper outlet installed by a qualified technician.

This appliance is for use on a nominal 120-volt circuit and has a grounding attachment plug that looks like the plug illustrated below. Make sure the appliance is connected to an outlet having the same configuration as the plug. No adaptor should be used with this appliance.

FRONT VIEW OF PLUG

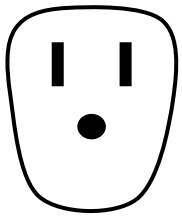

GROUNDING INSTRUCTIONS FOR PERMANENT HARDWIRED INSTALLATION:

This appliance must be connected to a grounded metal permanent wiring system; or an equipment grounding conductor must be run with the circuit conductors and connected to the equipment grounding terminal of the equipment itself.

SAFETY FEATURES

- OFF—RESET circuit breaker. This should be in the OFF position when system is not in use.
- Floor Brush Reset Button. Should the floor brush become clogged, the vacuum will automatically shut down. Clear clog and push reset.
- Overheat thermal protection. Should vacuum motor overheat, the system will automatically shut down. Clear obstruction and allow system to cool for 30 minutes and turn system back on.
- Torque limiter function. During retraction, if anything obstructs the free flow of the hose, hose movement will stop. Remove obstruction, press opposite direction momentarily and resume in the original direction.

Canavac Systems Inc © 2013

- A built in magnetic stop collar and sensing system stops the hose automatically when it reaches the end of travel in both directions. In/Out buttons will be disabled depending on where the hose is to prevent forcing the hose beyond the travel limit.

Canavac Systems Inc © 2013

INSTALLATION

For condensation reasons, DO NOT INSTALL ON AN OUTSIDE WALL OR A PARTITION THAT BACKS ONTO A COLD SPACE SUCH AS A GARAGE WALL. DO NOT INSTALL IN A LOCATION SUCH AS A GARAGE UNLESS CONDENSATION CAN BE CONTROLLED OR AVOIDED SUCH AS HEATED GARAGES OR GARAGES LOCATED IN WARM CLIMATES.

Location & Preparing the Wall Cavity ("ALL" Series units only)

It is important that you select a **central** location for installing the Doc IT Home Cleaning Center. The length of the hose allows for cleaning approximately 2,500 square feet.

From the left side of the unit ensure that unit is within 5.5' or less of a 120Vac receptacle if not hardwiring unit in.
If hardwiring unit in, remove power cord and use appropriate knock-out plugs for wiring and use the proper wire connector in accordance with electrical codes for hardwired appliances.
NOTE: for units without vacuum attached, a knockout is provided for wire entry from the bottom.

This product is designed for Retrofit or New construction installation.

Tools and Supplies needed for Installation

- #2 Phillips and/or #3 Robertson head screwdriver
- Drywall Saw or heavy duty utility knife
- Hand or power Saw
- Electric Drill with 2 ½" Hole saw and ¾" spade wood bit.
- 1/4" drive ratchet with an 11/32" socket
- Diagonal cutters
- Tape Measure
- Stud finder
- Pencil
- 2 scraps of 2"x4" OR 1" x 4" lumber at least 10" long each
- PVC to ABS Transition cement (IN only, not supplied)
- Crimping tool for terminals used on Low voltage wire(IN only)

Canavac Systems Inc © 2013

The **Doc IT ALL/Doc IT IN** system is designed to be installed in a stud cavity in a wall which is **clear of plumbing and electrical wiring**. If there is wiring or plumbing present in the cavity, call a qualified contractor to advise you on how to take care of the problem.

Prepare the drywall space by marking and cutting opening as follows:

1. Locate studs and mark a horizontal line at least 1½" above top of base board/trim but not less than 5" from floor between the desired studs.

2. Mark another horizontal line for the top of cabinet 68 ½"(57 ½" for IN Hose Management Only) up from the mark in step 1.

3. Carefully cut drywall flush to the inside of studs all the way around to the top and bottom horizontal marks.

4. Mark and cut 2 pieces of 2" x 4" (Support Blocks) such that they are just slightly above drywall edge at bottom of opening.

5. Use Wood Glue or tack these blocks inside the bottom against the exposed side of each stud as shown ("ALL" Series only). These will provide support for the cabinet until the fasteners are installed. These blocks will support the weight of the cabinet.

NOTE: If installing a unit with Vacuum ("ALL" Series) **STOP** now and see the next section:

- Preparing the Cabinet("ALL" Series)

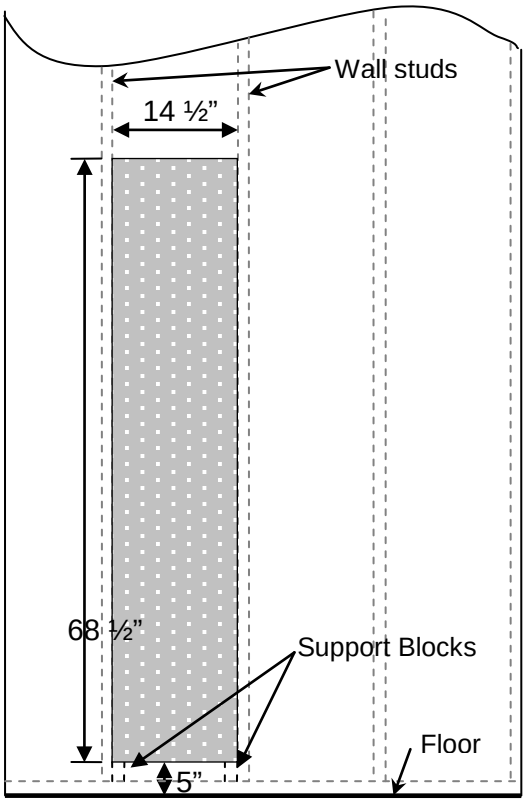

"ALL" Series Installation (HM +

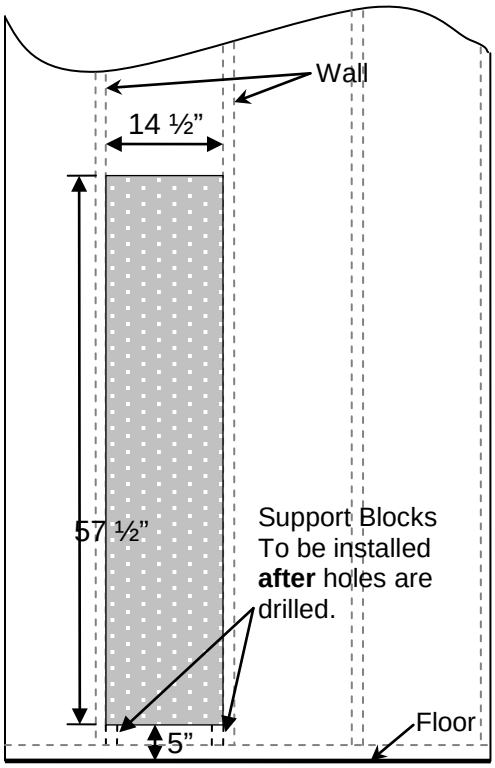

IN Installation (Hose Management)

Canavac Systems Inc © 2013

Continue HERE if installing a Hose Management (IN) unit only. The next few steps describe the position of wiring and piping for IN units that are to be used with a central vacuum system.

6. Drill a ¾" hole for the 120V power lead as shown. (Refer to this Step also for "ALL" Series hardwired units.) Route cable through the hole and allow at least 10"-15" of slack.

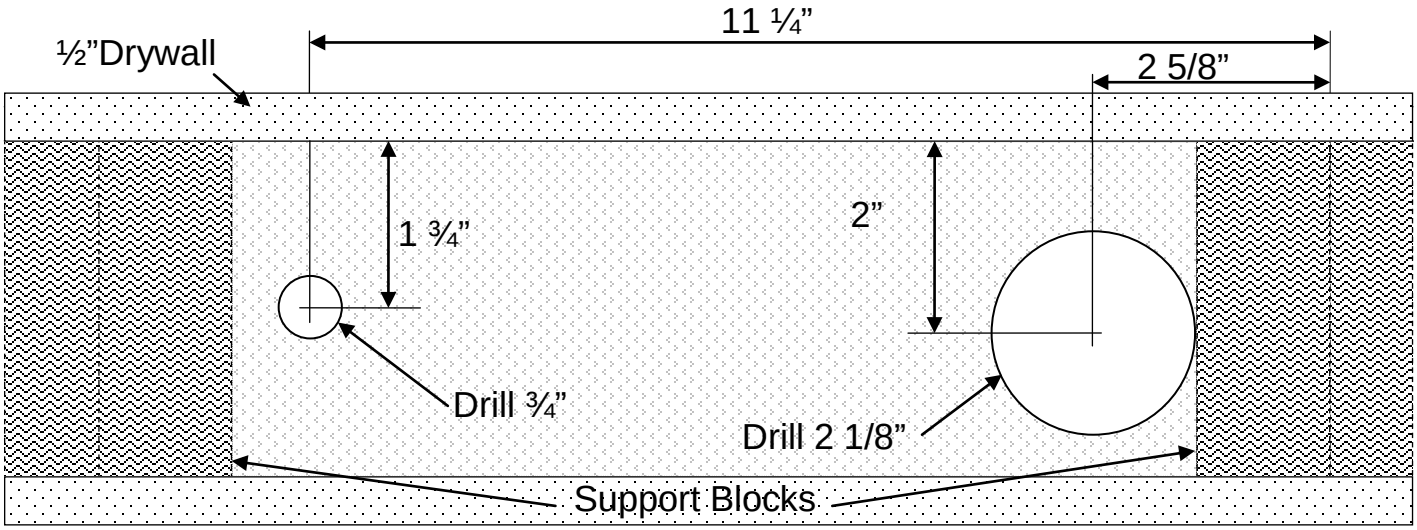

Step 6. Drilling Holes (IN Units) NOTE: Drawing Not to Scale

7. Ensuring there are no obstructions, drill a 2 1/8" hole through the bottom horizontal stud through floor and route 2" pvc vacuum pipe so that it is 1/4" to 1/2" below the lowest part of the cabinet opening.

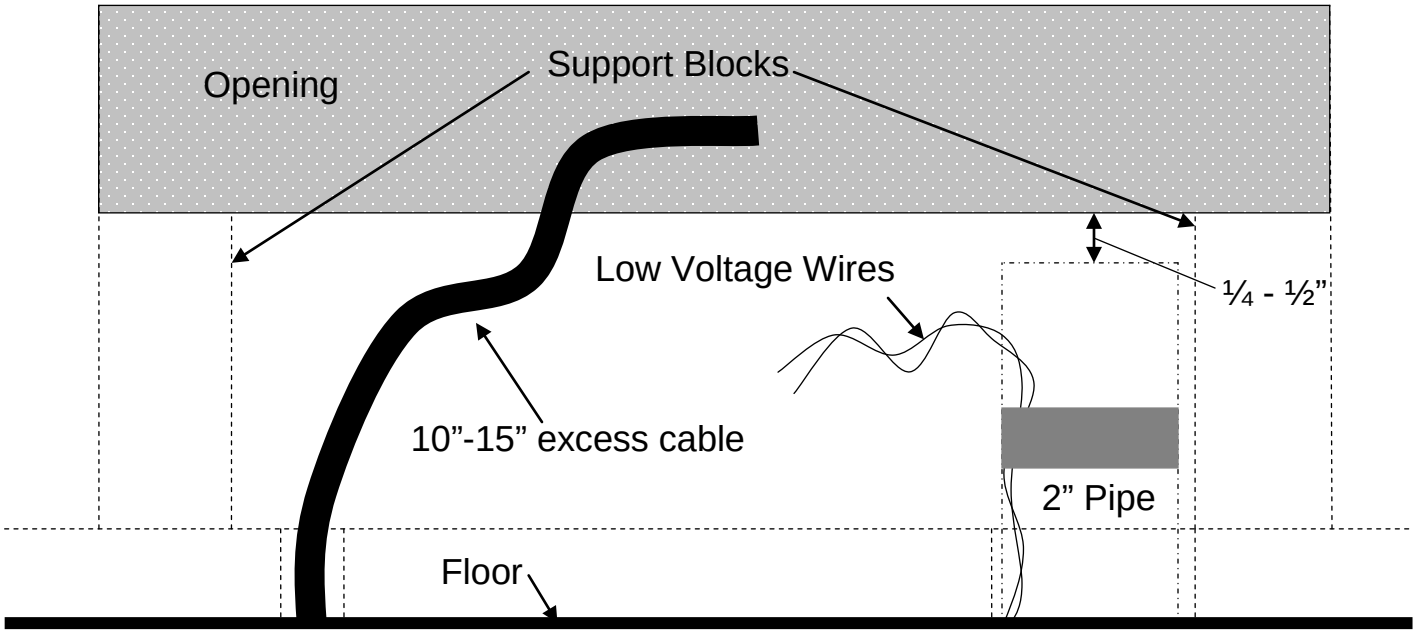

Step 7. Rough-in Pipe and Cable as shown. Tape low voltage wire to pipe.

Canavac Systems Inc © 2013

This concludes preparation of the wall space for both cabinets.

Preparing the Cabinet ("ALL" Series)

For ease of handling, the Cabinet and Vacuum are packaged separately. Carefully unpack and inspect the cabinet and the vacuum unit for damage.

The upper door is packaged separately for left or right hand opening. Remove this from the package and set it aside. This will be the last item installed.

Lay both units "backside" flat on the floor. Refer to the numbers on the drawings and the adjacent instructions for attaching the Vacuum to the Cabinet.

1. Remove two screws as shown.

2. Gently tap the left hand edge of the cover to slide in the direction shown.

3. Lift Access cover vertically away from cabinet to remove from slots. (Do not bend tabs)

4. Locate bottom corner cabinet hole and feed blower power cord through into access area.

5. Slide Vacuum unit into the face of the bottom part Cabinet by aligning studs with holes. Attach using 7 - #8 KEPs nuts and the 11/32 ratchet. Evenly secure all 7 nuts until snug.

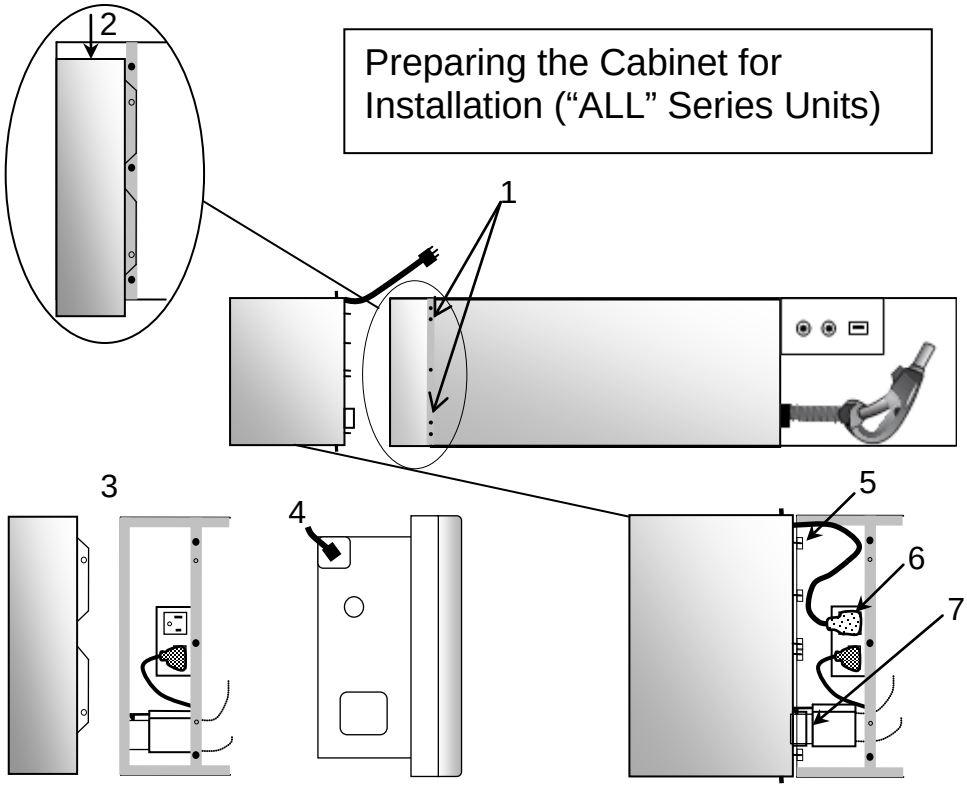

6. Connect Vacuum unit power cord to receptacle.

Canavac Systems Inc © 2013

7. This Step may be completed at a later stage-after fastener is installed that secures stud cabinet to stud. Align hose cuff connector with slot on Vacuum unit port. Connect hose cuff all the way into the port on the Vacuum unit until the clip clicks into place.

Proceed to Hardwired Installation OR Completing the Installation (“ALL” Series).

Canavac Systems Inc © 2013

Preparing the Cabinet (IN)

Carefully unpack and inspect the cabinet unit for damage.

The upper door is packaged separately for left or right hand opening. Remove this from the package and set it aside. This will be the last item installed.

Lay unit “backside” flat on the floor. Refer to the numbers on the drawings and the adjacent instructions for removing the access cover from the cabinet.

1. Remove screws as shown.

2. Gently tap the left hand edge of the cover to slide in the direction shown.

3. Lift Access cover vertically away from cabinet to remove from slots. (Do not bend tabs)

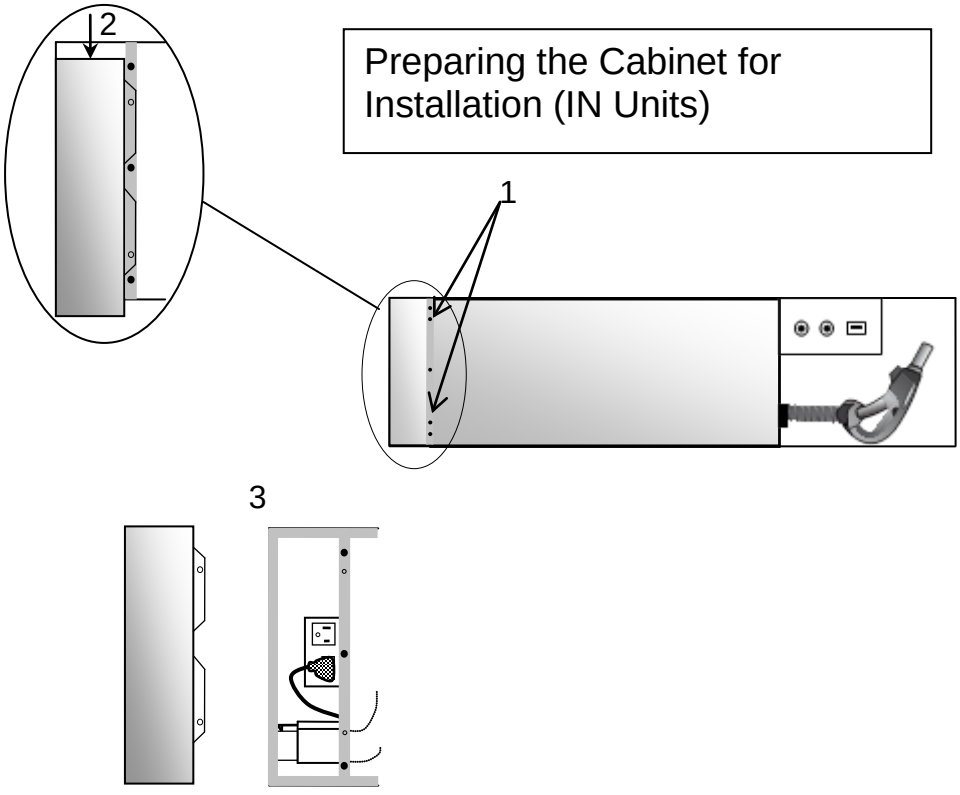

Canavac Systems Inc © 2013

Hardwired Permanent Installation:

SEE GROUNDING INSTRUCTIONS FOR PERMANENT HARDWIRED INSTALLATION BEFORE PROCEEDING on Page 4.

USE 14AWG approved wiring. For "ALL" Series units, connect to individual branch circuit.

For both series cabinets requiring hardwired installation, remove power cord from cabinet by removing ground lead and Marrette/wire nuts, and remove and keep strain relief (wire connector).

For "ALL" Series cabinets, a knock-out is provided on the left side of the cabinet. Power entry is only permitted from the left side of the cabinet. Knock out left side plug in access area.

Due to space constraints and for retrofit installations, it will be tricky getting the strain relief and the wiring into the access area prior to installing the cabinet. Here is a suggestion:

1. Temporarily install the cabinet into the opening until fully seated.
2. Mark the left 2x4 through the left hand knock-out with a pencil.
3. Remove the cabinet and drill an oversized hole ~ 2" dia where the mark was just made.
4. Loosely attach strain relief and nut so that most of the threads are just inside the access area.

In either case above, it may be necessary drill a ¾" centered in the bottom horizontal stud from below, into the cavity space to the left of the cabinet followed by the use of an electricians fishing tape/line to feed the power cable from the floor stud in through the left wall stud and into the access area of the cabinet.

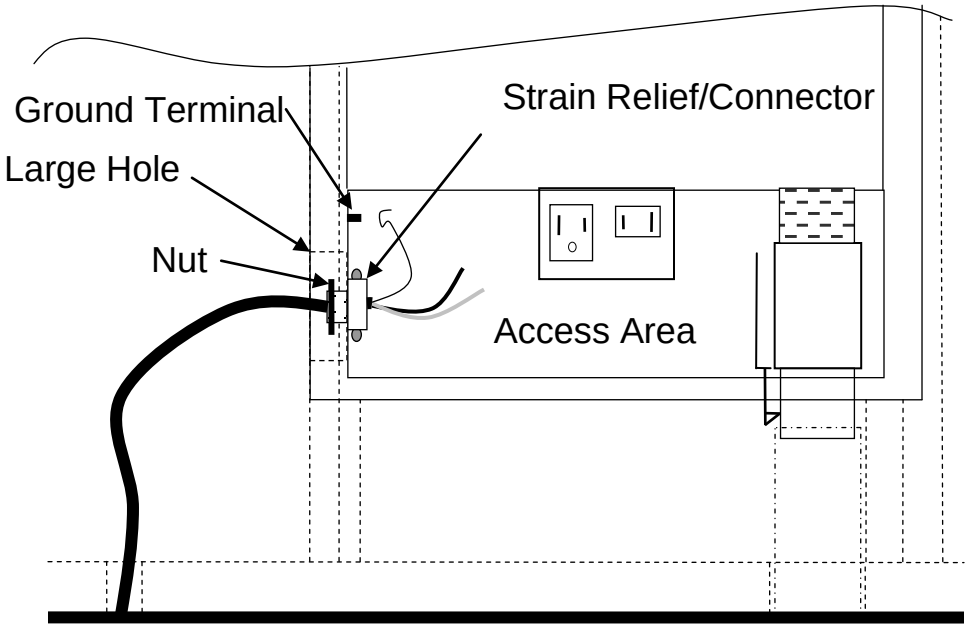

Power cable installation – side entry.

Canavac Systems Inc © 2013

For IN cabinets, a knock out is provided on the bottom of the access area.

Knock out bottom plug and insert strain relief from the access cover side and install retaining nut securely. Ensure screws on strain relief are backed off adequately to permit easy power cable entry.

Route all wiring into cabinet just prior to installing into wall cavity and onto support blocks.

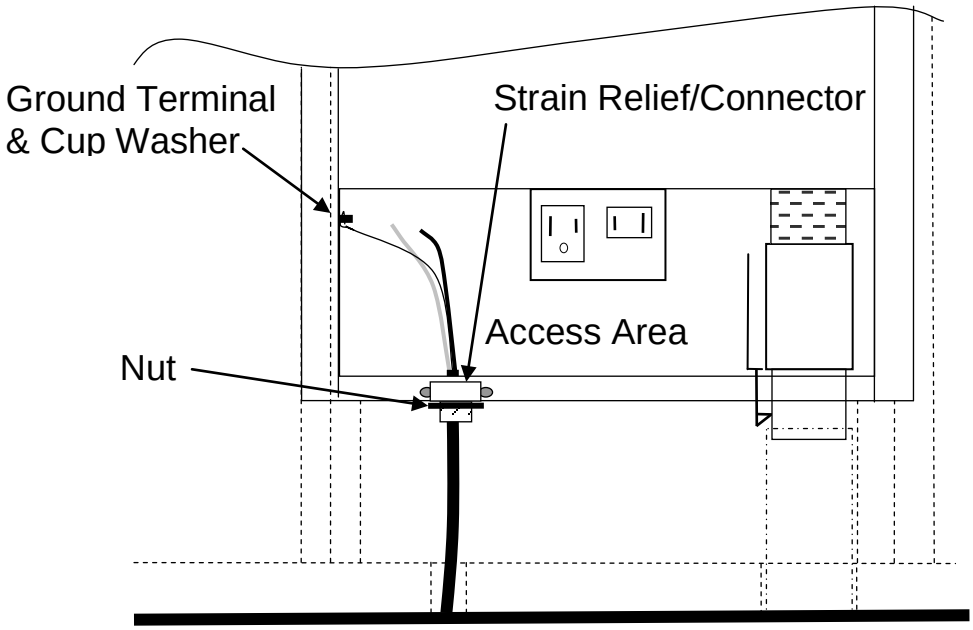

Power cable installation – bottom entry.

Canavac Systems Inc © 2013

Completing the Installation ("ALL" Series)

1. Route power cord down and behind small channel behind vacuum unit and slide cabinet all the way back until trim is tightly against wall.

2. Install 4 - #8 screws provided in locations as shown in adjacent drawing.

3. Ensure plugs and hose connections are tightly or fully seated properly in their respective receptacles.

4. Replace access cover by placing cover over opening so that bottom tabs in cover line up and seat in bottom slots of cabinet.

5. Gently slide cover to the left until cover is aligned with cabinet. Re-install 2 screws to secure in place. DO NOT OVERTIGHTEN. (Max torque: 14 Ounce force inches)

6. Connect power cord to 120V Receptacle.

7. This concludes the installation of the cabinet. The door may be installed next OR proceed to the OPERATION section of this manual for proper care and use of the system.

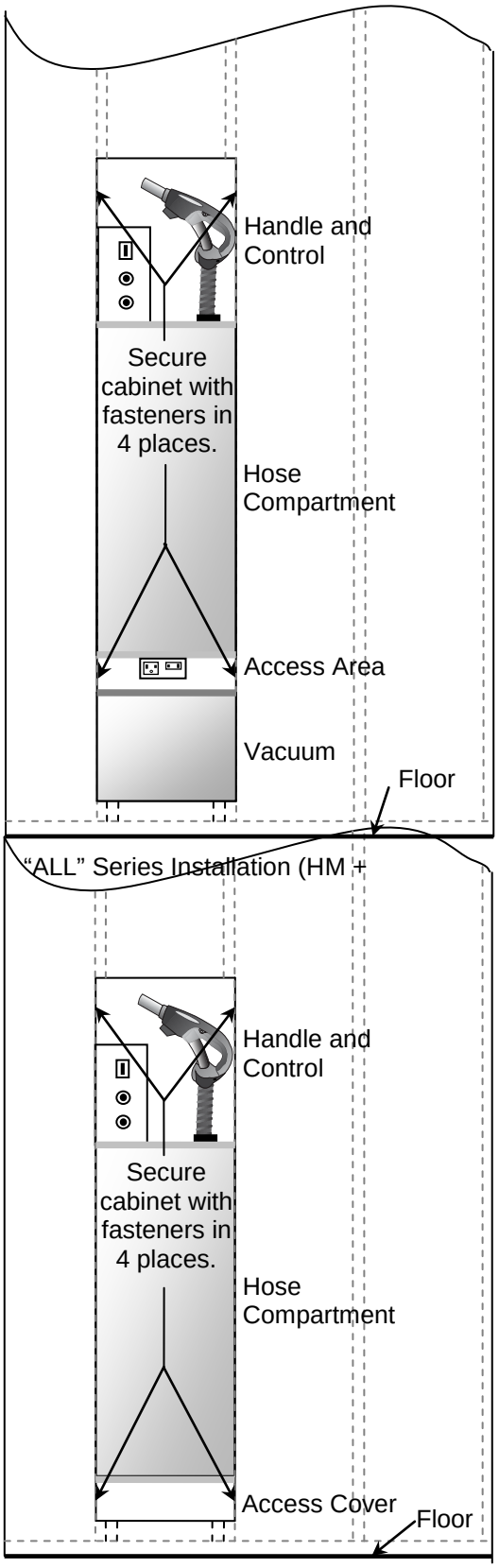

Canavac Systems Inc © 2013

Completing the Installation (IN)

1. Route wiring as instructed in the Hardwired installation section above.

2. Using ABS to PVC transition cement Glue adaptor onto 2” pipe as shown ensuring notch is to the left.

3. Strip 2 low voltage wires and secure to 2 screw terminals on IN-PAK. Then insert IN-PAK into vacant receptacle in access area.

4. Strip and connect power cable leads and attach with Marrettes/wire nuts making sure white connects to white lead and black connects to black.

5. Connect bare copper ground lead to ground terminal post on cabinet by loosening nut, looping ground lead around stud and retightening nut. Ground lead should lay inside cup washer to prevent lead from moving out of place while tightening nut.

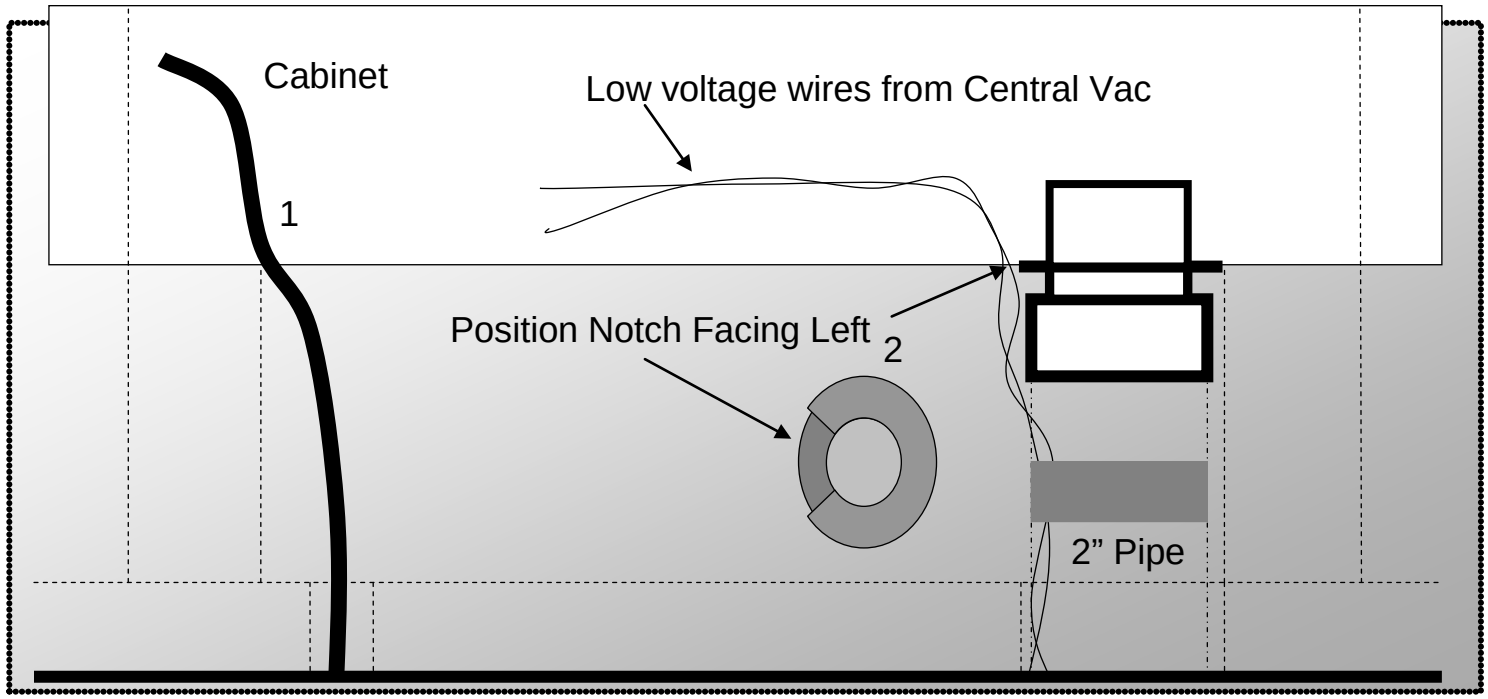

Route Power Cable and Install Hose to pipe adaptor onto Pipe as shown

Canavac Systems Inc © 2013

Canavac Systems Inc © 2013

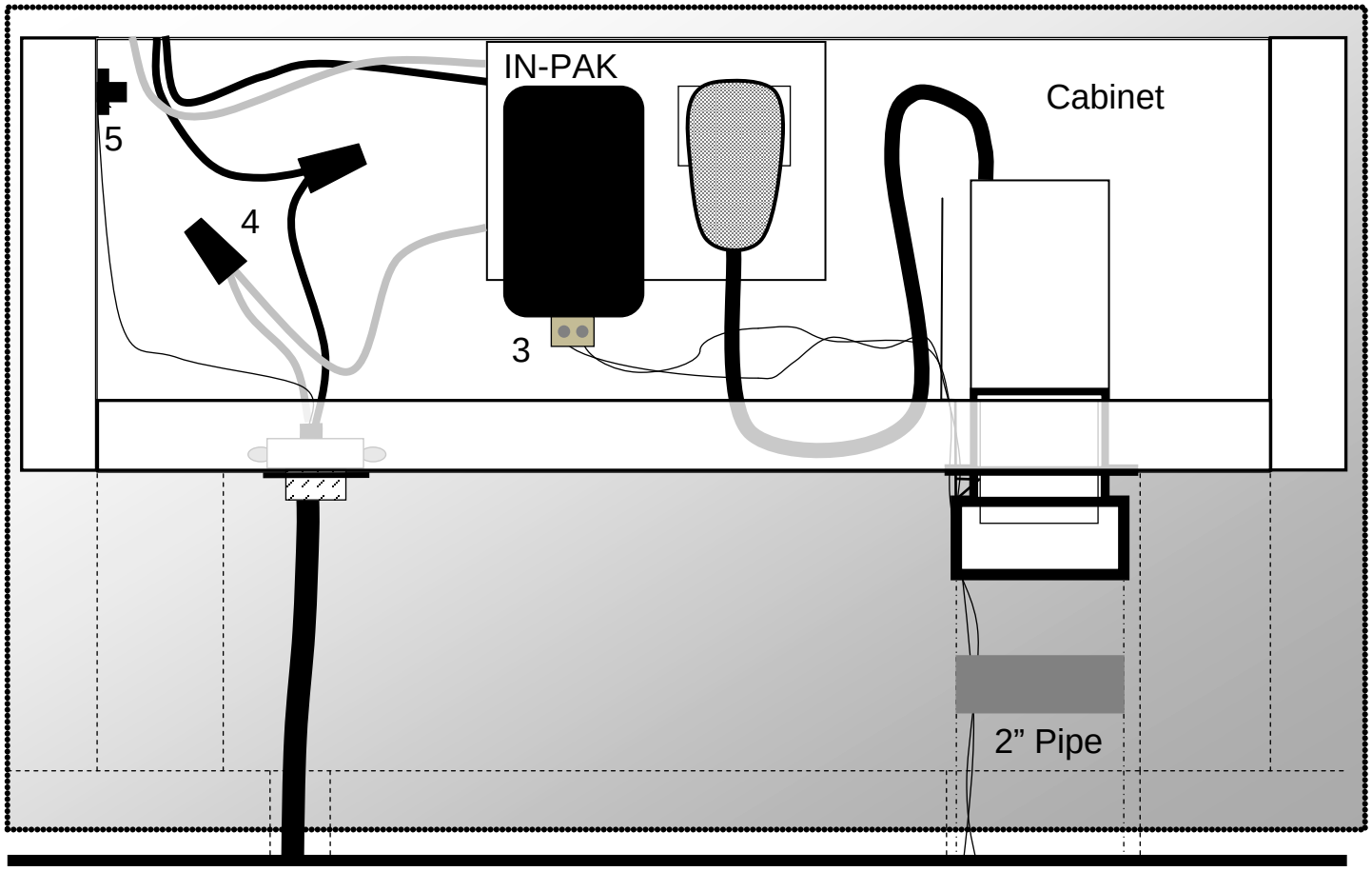

Connect Power Cable, Ground and Low Voltage Wires as shown

NOTE: The system comes with the door in a separate carton from the main cabinet for left or right hand installation. To assemble the door follow door installation instructions included in the door package.

Canavac Systems Inc © 2013

OPERATION

Initial Preparation

Once the system is properly installed and electrically connected, it is ready for initial startup. Make sure the switch circuit breaker (1) is ON.

When first shipped, the unit will come with a filter bag pre-installed in the vacuum. Before operating, verify that this is the case by opening the cover on the bottom of the unit. To do so, press buttons on both sides of the cabinet to release door. Lower door to floor and ensure bag is attached. (See diagram)

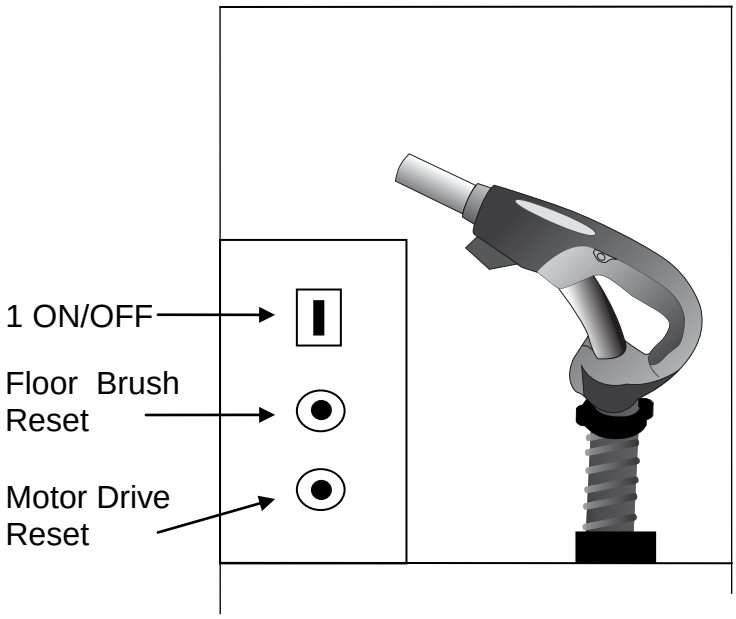

Be sure that the filter dust collection bag is in place in the vacuum. Air exhausts at the bottom of the cabinet.

Caution: WARRANTY VOID IF UNIT IS USED WITHOUT COLLECTION BAG.

NOTE: Bag comes with dust cap to prevent a full bag from blowing back dust during removal. To use, simply unfold, peel and stick dust cap over bag opening.

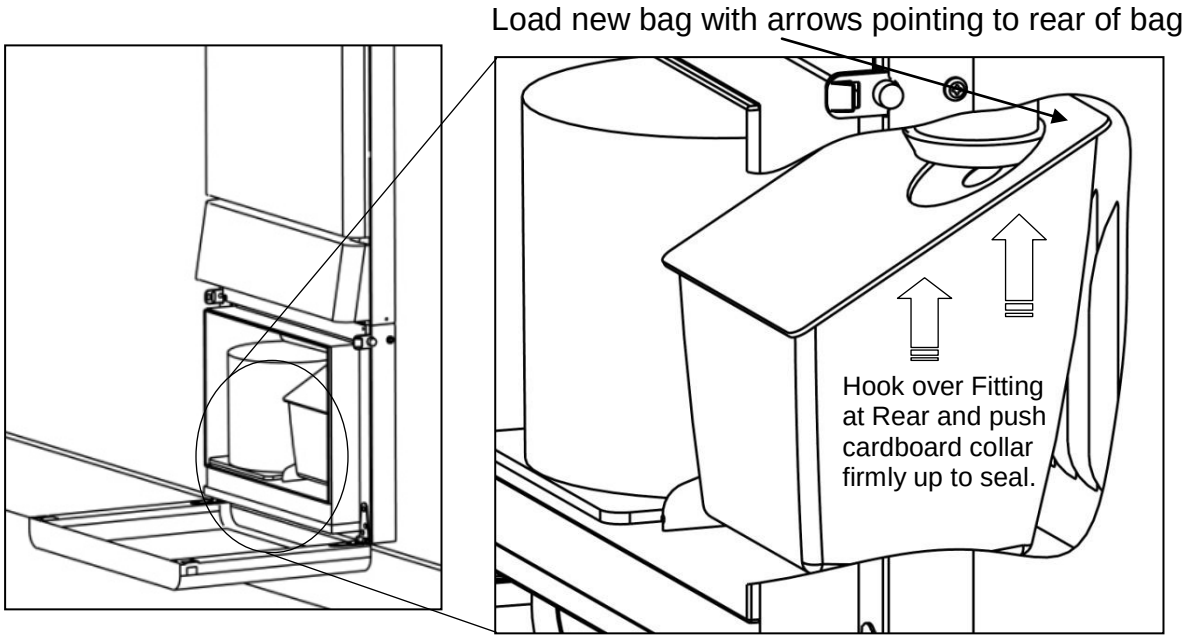

Canavac Systems Inc © 2013

Hose Handle Controls

Push and hold the OUT button located on the handle keypad on the Hand Grip and the hose will move upward and out of the hose compartment.

- When a sufficient length of hose has been extended so that there is room to vacuum, release the button, remove the rubber cap and connect the vacuum attachments.
- When using an approved Power head, connect it securely to the Telescopic Wand and then connect the two prong connector in the receptacle below the Hand Grip. If you are using non-electric attachments, be sure they are securely attached to the Hand Grip or Telescopic Wand.
- To start the vacuum only, push the VAC Button. To start the vacuum and the Power head, push the VAC Button again within 3 seconds. To turn off the vacuum and the Power head, push the VAC Button one final time.
- While using the system, you will be able to extend or retract the hose when necessary. When vacuuming is finished, stop the vacuum by pushing the VAC Button on the key pad. Retract the hose by pushing the IN Button. The hose will retract into the wall cavity.
- Place the rubber cap on the end of the handle to permit vacuum at other central vacuum inlets (such as Vacpan, if installed).

Notes:

- If for any reason it becomes difficult to fully retract the Hose into the Cabinet, refer to the troubleshooting section of this manual.
- When Hose is fully retracted, the IN button will be disabled to prevent damage to the hose. Similarly when the hose is fully extended, the OUT button will not function to prevent damage to the hose.
- To maximize Vacuum motor life, the software in the system control board prevents the user from rapidly turning the vacuum from OFF to ON and back OFF again. Be patient when operating this function.
- This appliance is equipped with an electronic vacuum motor starting feature to improve system reliability. A short duration buzz when the motor is first started (wthin 1-2 seconds) is normal for this product.

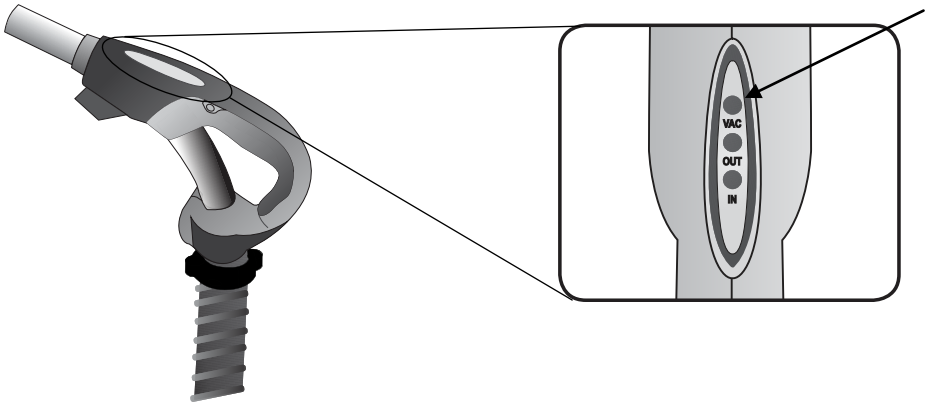

ON/OFF Button for VAC and/or Power Head.

Canavac Systems Inc © 2013

Bag Replacement

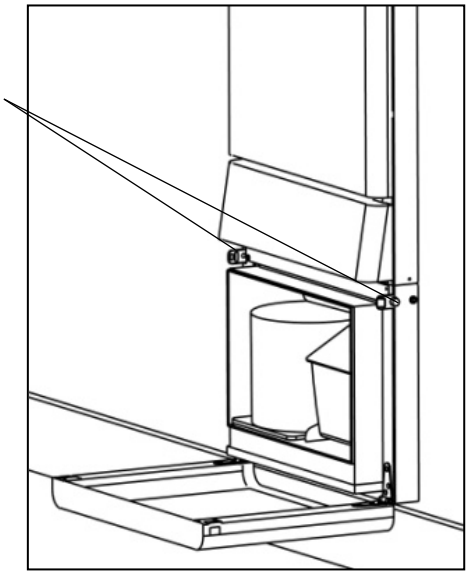

Open vacuum compartment by pressing side buttons located at top of door, inward, until door releases.

To install a new bag, place cardboard collar in top back of vacuum cabinet as shown and tilt upward while applying pressure to the underside of the cardboard collar.

Rubber seal should be fully engaged with pipe fitting in cabinet. Gently pull collar down to check engagement.

Expand pleats of vacuum bag so that bag fills bag space in cabinet.

Close cover until both latches engage in door.

Canavac Systems Inc © 2013

CARE AND MAINTENANCE

Maintenance:		
Item	*Maintenance Task*	*Frequency*
Bag Replacement	*Open bottom door, remove and replace bag*	*Check Monthly Replace/As needed*
Hose maintenance	*Run hose out completely. Wipe thoroughly from end to end with damp cloth.*	*Quarterly or as required*
**Motor Inlet Filter*	*Disconnect power or turn off at household breaker. Clean or Replace filter by removing Cover from top of motor beside Filter Bag. Slide fingers between foam and motor grill to center and snap cover off.*	*6 Months or as required based on use.*

SPECIFICATIONS

Electrical

Input Voltage:	120VAC	***Frequency:*** 60Hz	
Standby PWR:	Typically < 1W	***Active Current:*** 0.6-0.8Amps (Dir Dependent)	
System Power:	1150W	***Retractor PWR:*** 95-130W	
Vacuum Motor:	120V, 11A	***Power Brush Receptacle:*** 120V, 2 Amps	
Usable Hose Length: 41 Feet			

Mechanical

Hose Management Cabinet*:*

Height*:* ***Front****: - 58 ¼", **In wall**(rear) 57"*
Width*:* ***Front****: -16 5/8", **In wall**(rear) 14 3/16"*
Depth*:* 6 ½" (At smallest height of Transition Cover)

Weight*(45' Hose): 53.285lb (less carton)*

Vacuum Cabinet: *16 ¾"W x 12"H x 7 1/8"D*
Weight(45' Hose): *18.352lbs (less carton)*
Dust bag capacity: *1 Gal US*

PARTS LIST

B5-006-3 (Filter Bag, PAP Doc IT ALL, 5 Ply-3 Pack)

Canavac Systems Inc © 2013

TROUBLE SHOOTING GUIDE

Refer to Diagram on following page for Controls and Reset Buttons.

PROBLEM	***SOLUTION***
Nothing works, will not power-up	• Be sure that the house circuit breaker is on and there is 120 V AC present at the outlet that the unit is plugged into. • Referring to the figure on the following page, In the top compartment of the unit there is an on/off switch(1), be sure it is in the ON/RESET position. The unit is controlled from the buttons on the handle.
Unit powers up but trips the breaker in the panel momentarily after hose is reeled out.	If Doc IT ALL or Doc IT IN is wired to a circuit with an Arc Fault Circuit Interrupter (AFCI) in the building's electrical panel, it may be tripping off due to motor noise. Some brands of AFCIs are designed to overcome electrical noise generated from motors, some are not, consult your local electrician.
Hose has difficulty fully retracting into cabinet, or stops intermittently when in use. OR the hose stops when trying to come out.	• Extend hose fully out of the cabinet and remove any twists that may have occurred during usage. • To assist the hose during retraction; with vacuum running, cap the end of the hose briefly to create a seal. This will cause the hose to contract permitting more room for the hose to drop into the cabinet. • For situations where the above solutions do not work and after several years or more of service, it may be necessary to recoat the inside of the cabinet with another layer of dry silicone lubricant. Run hose all the way out, remove access cover followed by the hose cover. Then using 3M Dry Silicone Lubricant product # 08897, liberally spray inside of hose compartment and hose cabinet cover. Allow 30 minutes for aerosol propellant to dissipate before replacing hose cabinet cover. Retract hose as usual. • It may occur that the hose may stop while running the hose OUT of the cabinet. To overcome this, reel the hose in a bit then assist the hose by gently pulling on the hose while trying to run it out again. Do this repeatedly until hose is all the way out. Make sure all bends and twists are straightened before retracting hose in again.
Power Head does not work	• Within 3 seconds, VAC button to be pressed twice to turn on Vacuum AND Power Head. Check HOSE HANDLE CONTROLS section of this manual. • If so equipped, check the power head switch or reset button. • Check that the wand and handle are fully seated. • Check that breaker (2) in cabinet is reset.
Retractor and Power Head work, but no vacuum.	• For "ALL" Series units(with Vacuum), check to make sure power connector is connected inside access cover • For IN units (With low voltage connections to Central vac) verify solid/secure connections to IN-PAK, and that it is plugged in. o Check central vac breaker. o Check power cord on central vac o Check circuit breaker in panel is not tripped for CV circuit.
Vacuum runs and shuts off after a period of time	Vacuum has a thermal overload protection device that will shut off the motor if it overheats. Overheating will occur mainly if the unit is starved of air as in the case of a plugged hose. To clear, turn off power to system for 30 minutes and clear clog/replace full vac bag. Thermal overload device will automatically reset during this period of time.
Vacuum Sounds	This appliance is equipped with an electronic vacuum motor starting feature to

Canavac Systems Inc © 2013

Different than other Vacuums, on Start-up.	improve system reliability. A short duration buzz when the motor is first started (wthin 1-2 seconds) is normal for this product.
Retractor does not move hose in either direction	• Check that MOTOR breaker (3) in cabinet is reset. • In Access Area, check 2 pin connectors between Hose and Cabinet wiring.
Poor suction	• Check bag OR hose for blockage. • Ensure exhaust on bottom of unit is not blocked.
Problems other than those listed.	Contact your local Doc IT Dealer/Distributor for service.

CONTROLS AND RESET BUTTONS

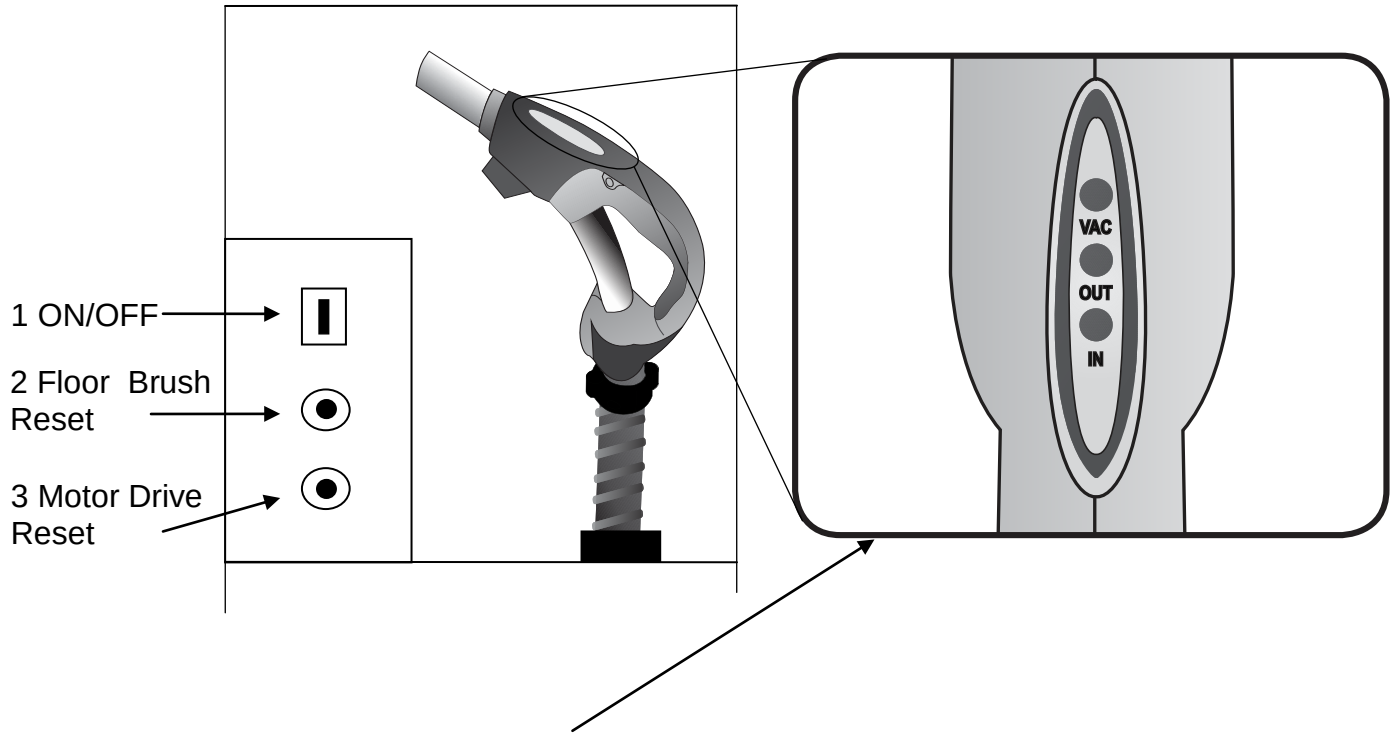

VAC button controls the Vacuum and Power Head (Except for Air ONLY Systems)

OUT permits the Hose to extend from the Cabinet and will stop if an internal obstruction or excessive twist occurs in cabinet. Reverse direction and then resume while assisting with extraction.

IN permits the hose to Retract back into the cabinet. Retractor motor will stop and button will disable if the hose gets caught up on something. Briefly reverse direction, free hose of obstruction and then resume.

Canavac Systems Inc © 2013

Canavac Systems Inc © 2013